Optima 36
Designer's Guide

Optima

Clear Thinking

Contents

Optima 36

Head Track Details – 36mm Wide: Vertical Sections

NOTE: 2122 Glazing Gasket for 12.0 & 12.8 Glass.
2205 Glazing Gasket for 10.0 & 10.8 Glass.

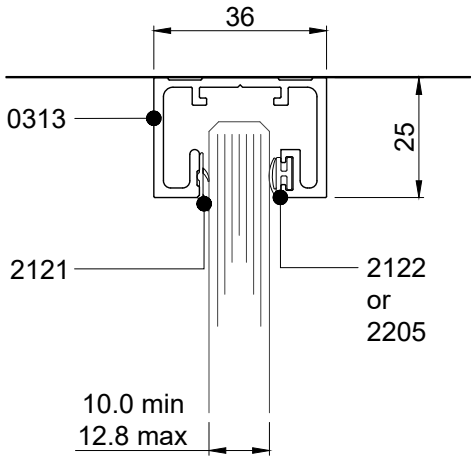

Single glazed head track
36mm x 25mm

036102a-01

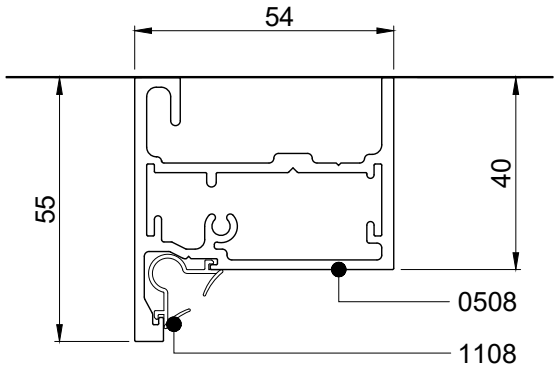

Optima 36
door frame head

036102a-02

Base Track Details – 36mm Wide: Vertical Sections

NOTE: 2122 Glazing Gasket for 12.0 & 12.8 Glass.
2205 Glazing Gasket for 10.0 & 10.8 Glass.

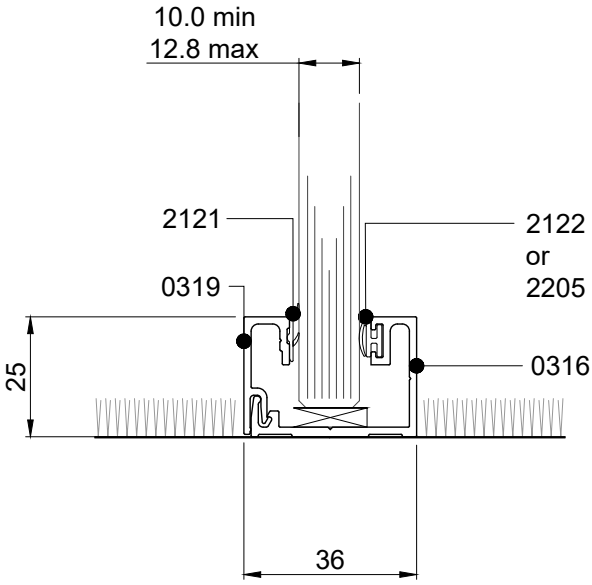

Single glazed floor track
36mm x 25mm with clip-in bead

036102a-03

Optima

Optima 36

Abutment Details – 36mm Wide: Horizontal Sections

NOTE: 2122 Glazing Gasket for 12.0 & 12.8 Glass.
2205 Glazing Gasket for 10.0 & 10.8 Glass.

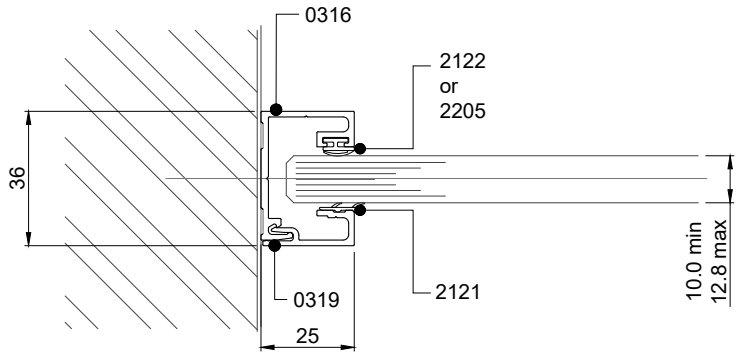

Single glazed 36mm x 25mm wall abutment with clip-in bead – dry joint

036103a-01

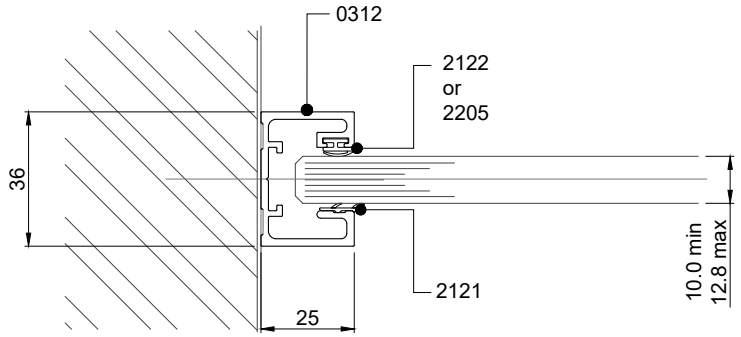

Single glazed 36mm x 25mm wall abutment

036103a-02

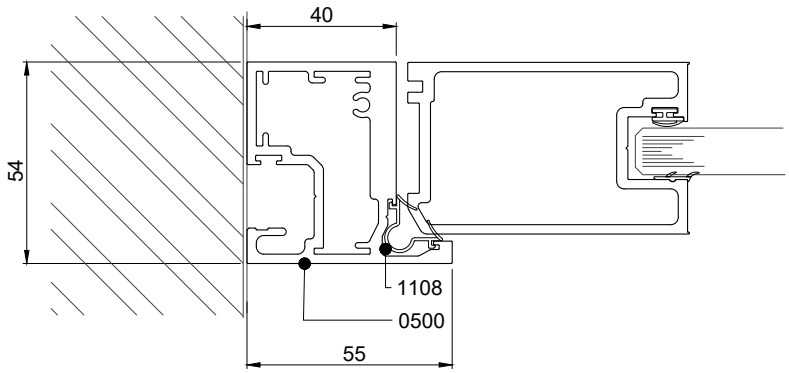

Optima 36 door frame with non-rebated door

036103a-03

Optima 36

Door and Frame - Single Glazed: Sash Lock with Concealed Closer

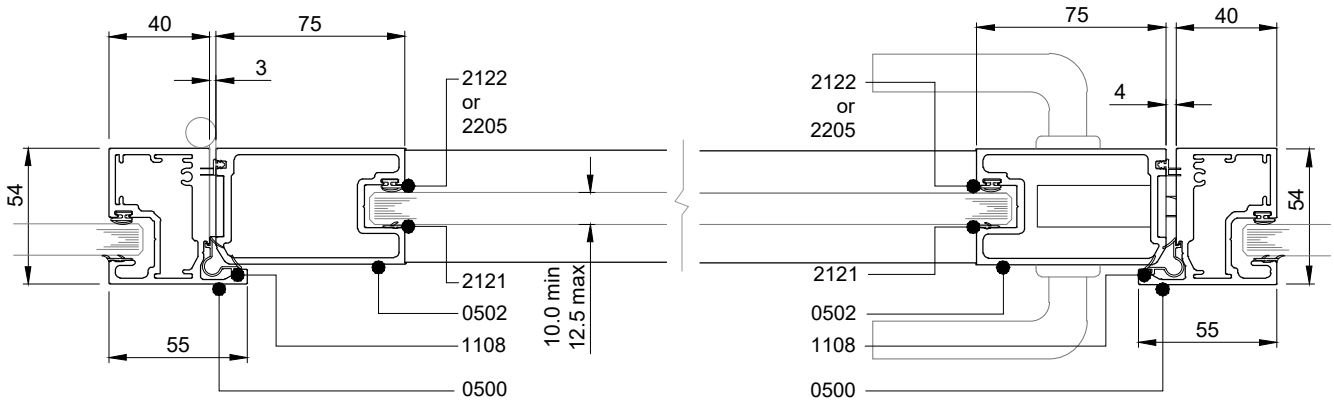

Horizontal section Optima 36 door frame with non-rebated door, concealed closer

036104a-01

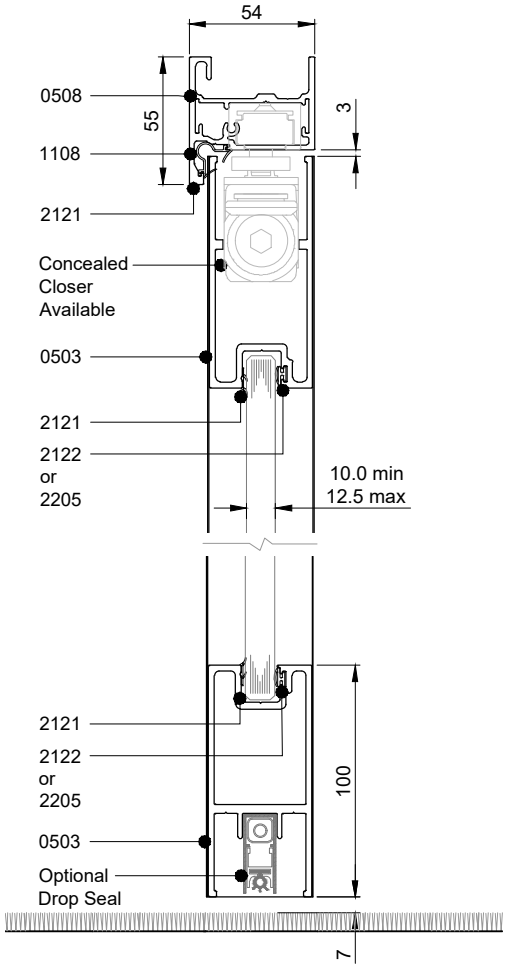

Vertical section showing Optima 36 door frame with non-rebated door, concealed closer

036104a-02

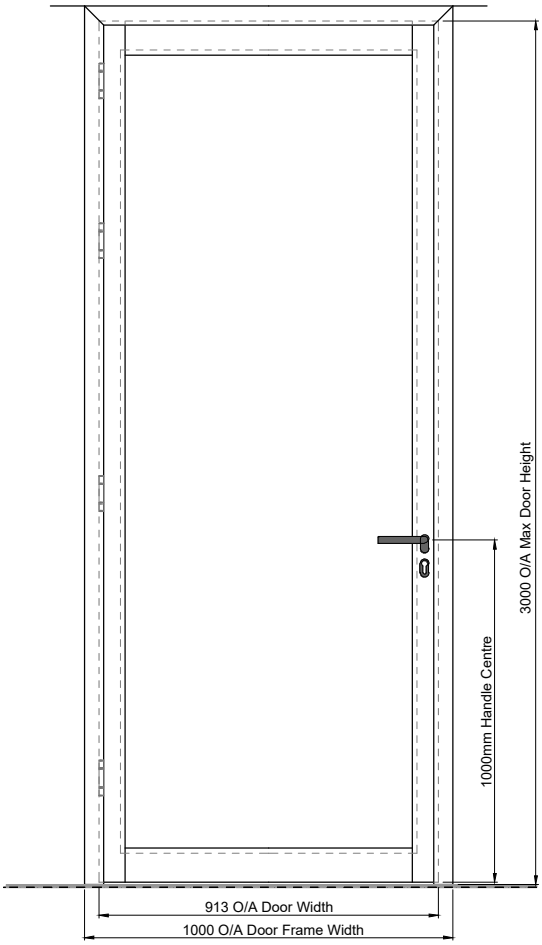

Elevation showing Optima 36 door frame with non-rebated door, concealed closer

036104a-03

Optima

Optima 36

Door and Frame - Single Glazed: Dead Lock with Concealed Closer

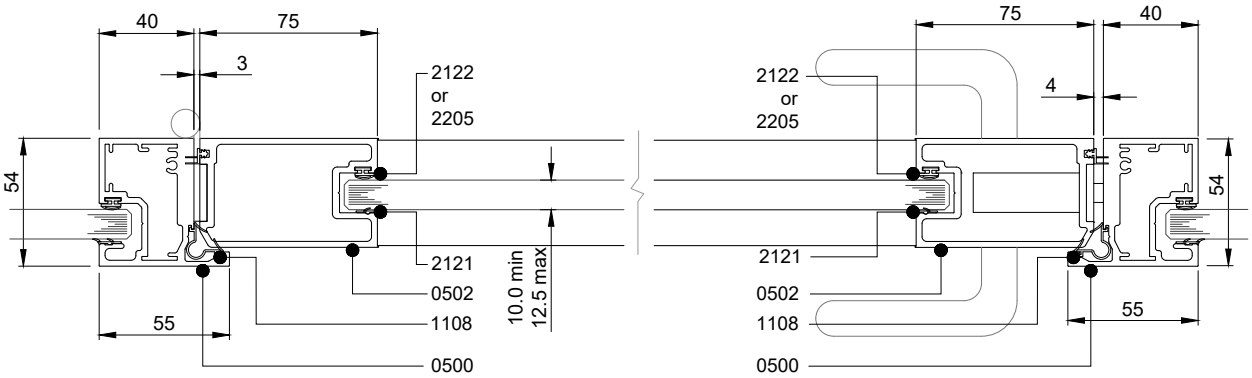

Horizontal section Optima 36 door frame with non-rebated door, concealed closer

036105a-01

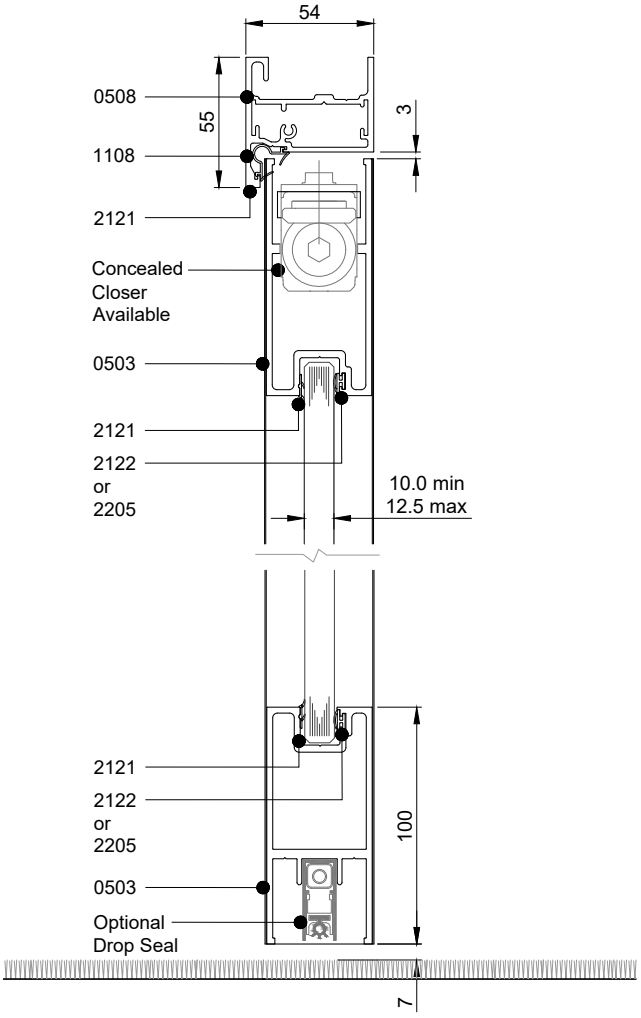

Vertical section showing Optima 36 door frame with non-rebated door, concealed closer

036105a-02

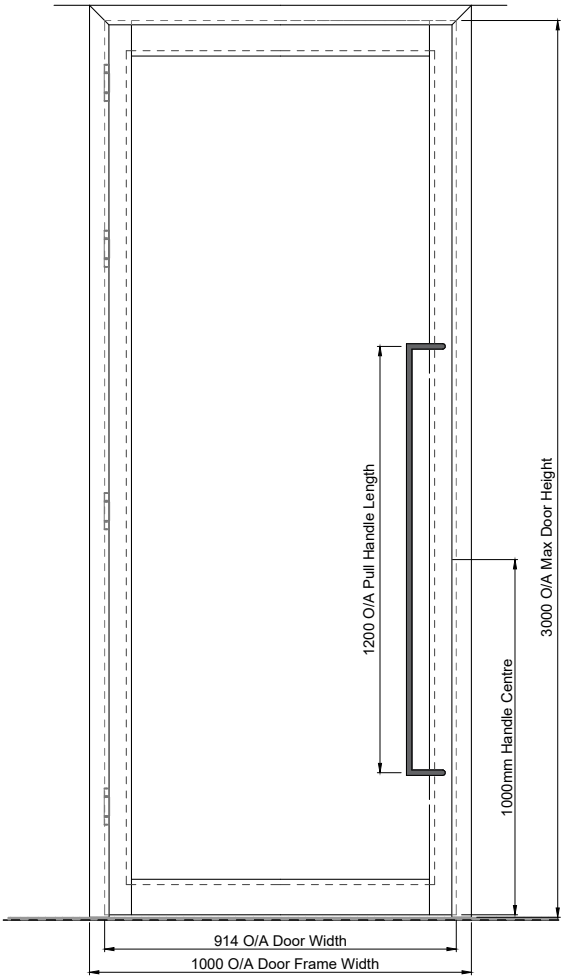

Elevation showing Optima 36 door frame with non-rebated door, concealed closer

036105a-03

Optima 36

Glass to Glass Joint Options: Horizontal Sections

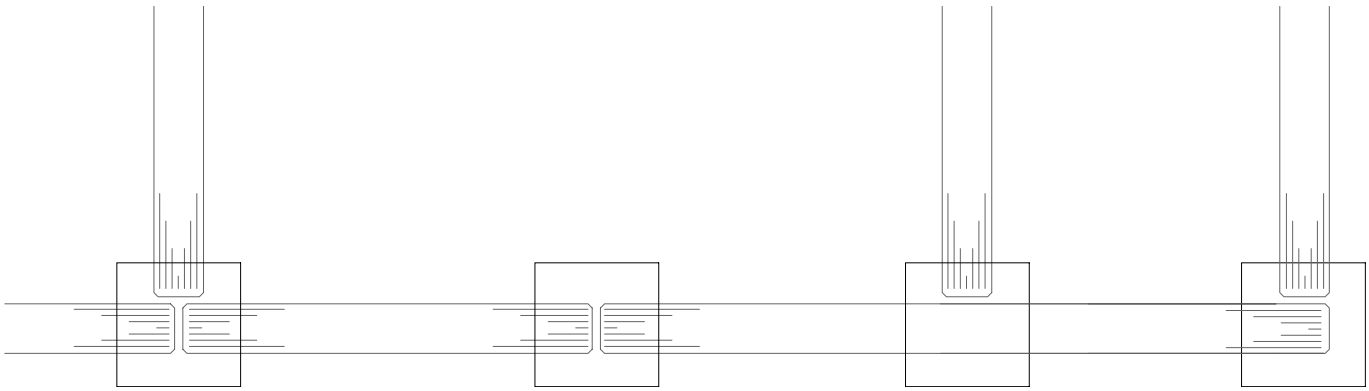

3-way to butt joint

036106a-01

Butt joint

036106a-02

3-way to plain glass

036106a-03

90° butt joint corner

036106a-04

Optima 36

Glass to Glass Joint Options: Horizontal Sections

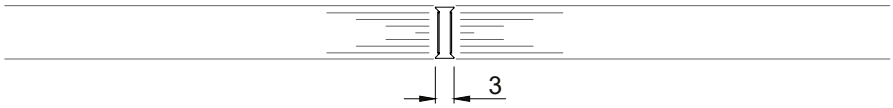

1001 - 10mm glass
1081 - 10.8mm glass
1201 - 12mm glass
1281 - 12.8mm glass

Glass to glass Ghost dry joint

036107a-01

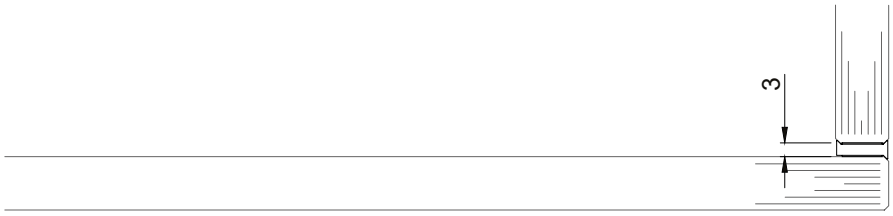

1002 - 10mm glass
1082 - 10.8mm glass
1202 - 12mm glass
1282 - 12.8mm glass

90º corner Ghost dry joint

036107a-02

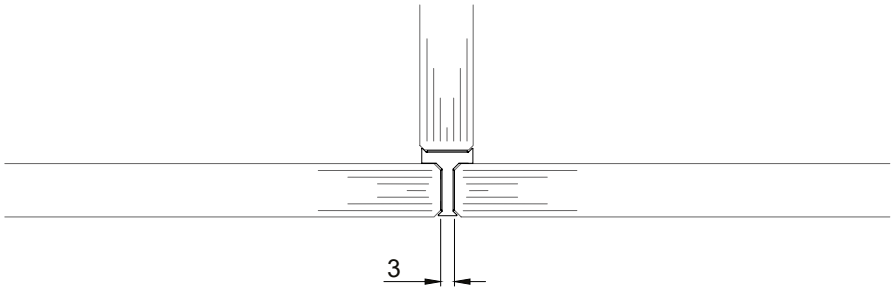

1004 - 10mm glass
1084 - 10.8mm glass
1204 - 12mm glass
1284 - 12.8mm glass

Ghost 3-way joint

036107a-03

Optima 36

Head Track Details – 54mm Wide: Vertical Sections

NOTE: 2122 Glazing Gasket for 12.0 & 12.8 Glass.
2205 Glazing Gasket for 10.0 & 10.8 Glass.

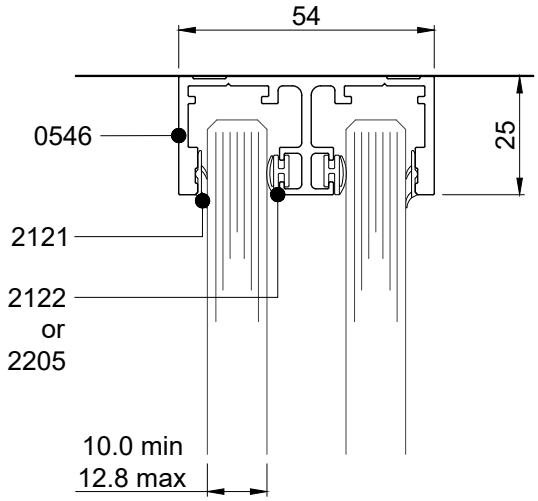

Double glazed head track 54mm x 25mm

036108a-01

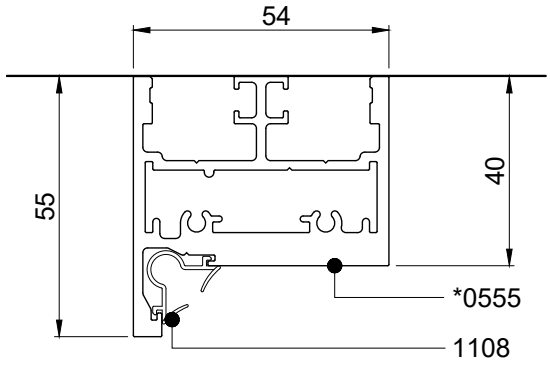

Optima 36 double glazed door frame head

036108a-02

Base Track Details – 54mm Wide: Vertical Sections

NOTE: 2122 Glazing Gasket for 12.0 & 12.8 Glass.
2205 Glazing Gasket for 10.0 & 10.8 Glass.

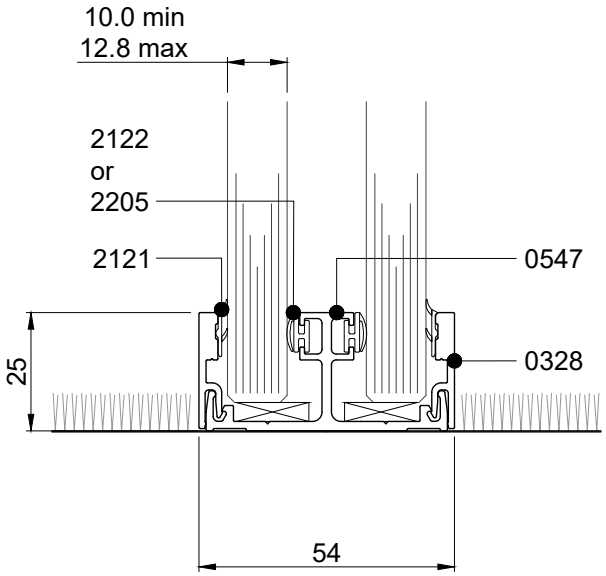

Double glazed floor track 54mm x 25mm with clip-in bead

036108a-03

Optima 36

Abutment Details - 54mm Wide: Horizontal Sections

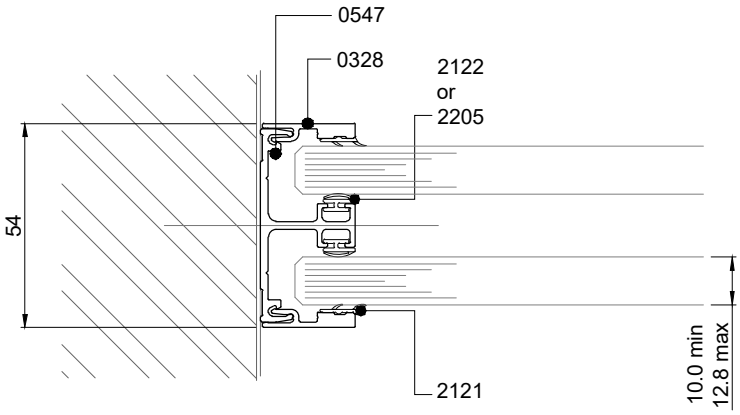

Double glazed
54mm x 25mm wall abutment
with clip-in bead - dry joint

036109a-01

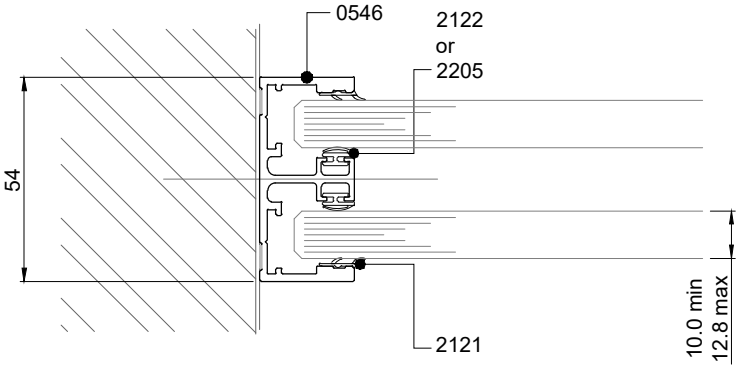

Double glazed
54mm x 25mm wall abutment

036109a-02

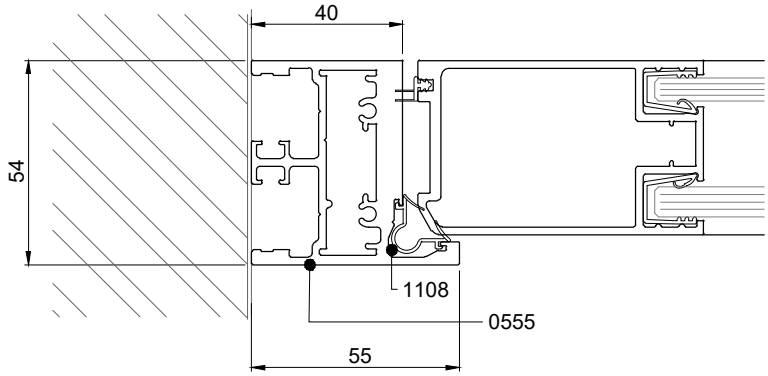

Optima 36 DG door frame
with non rebated door

036109a-03

Optima 36

Door and Frame - Double Glazed: Sash Lock, Concealed Closer

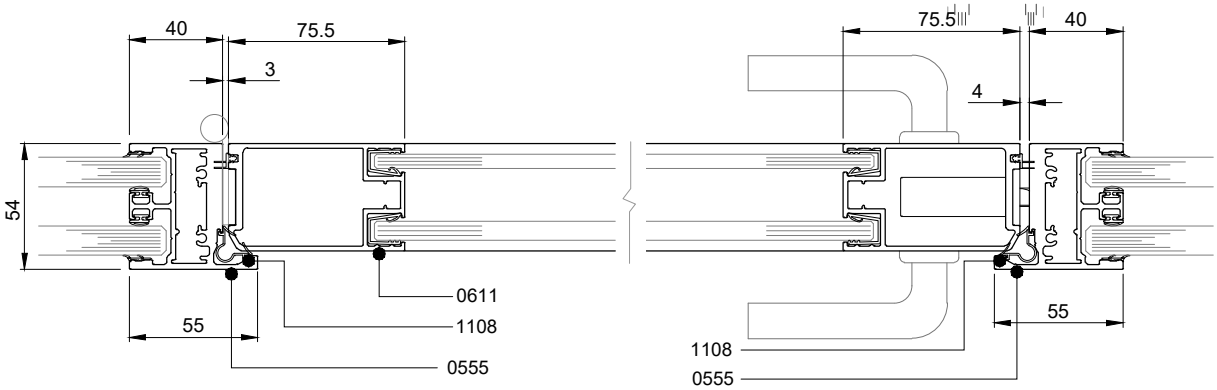

Horizontal section
Optima 36 double glazed door frame
non-rebated door, concealed closer

036110a-01

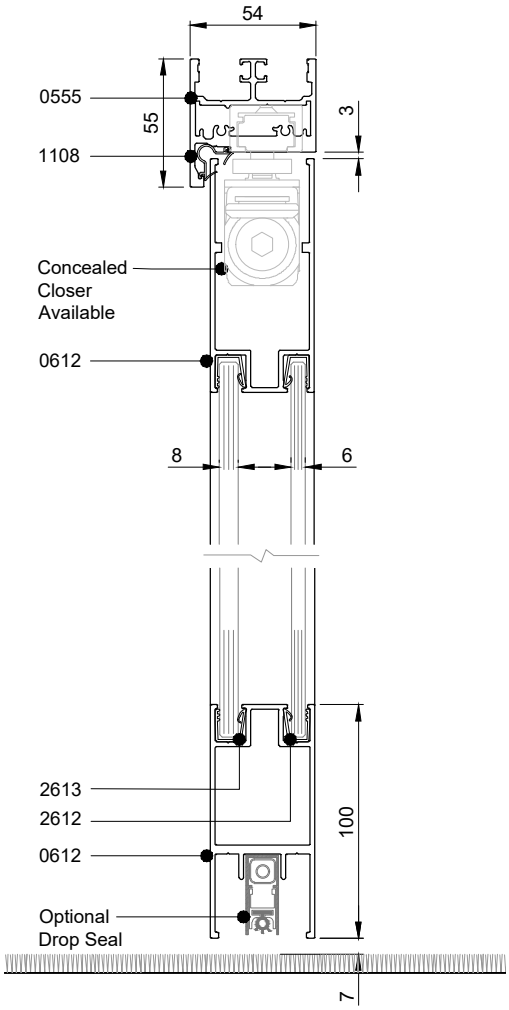

Vertical section showing
Optima 36 double glazed door frame
with non-rebated door, concealed closer

036110a-02

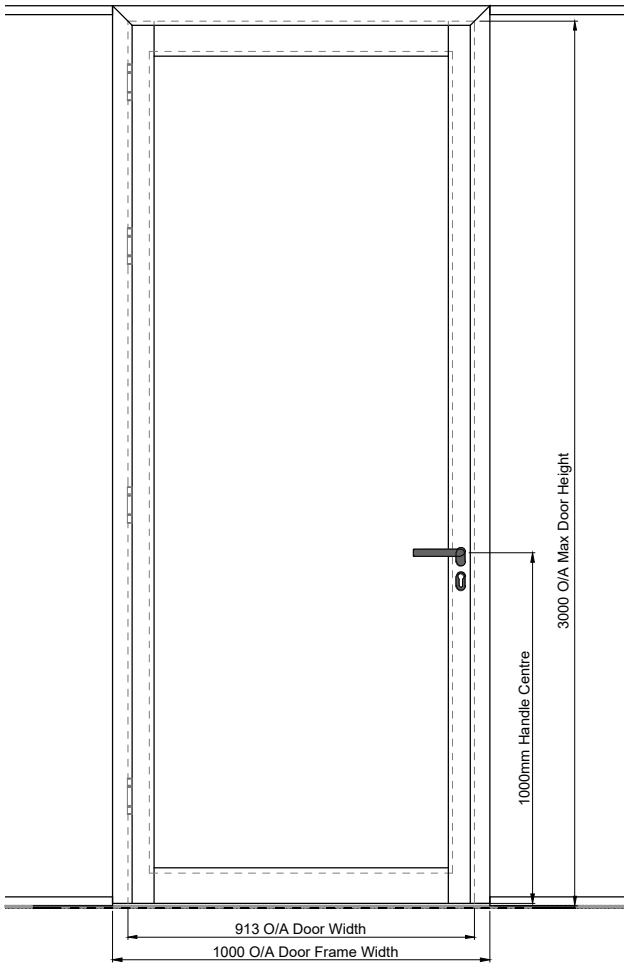

Elevation showing
Optima 36 double glazed door frame
with non-rebated door, concealed closer

036110a-03

Optima 36

Door and Frame - Double Glazed: Dead Lock with Concealed Closer

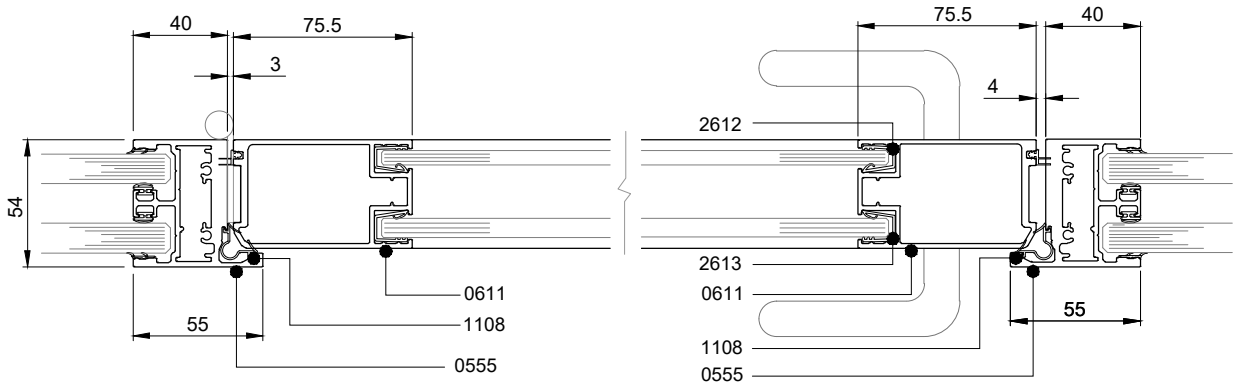

Horizontal section
Optima 36 double glazed door frame
non-rebated door, concealed closer

036111a-01

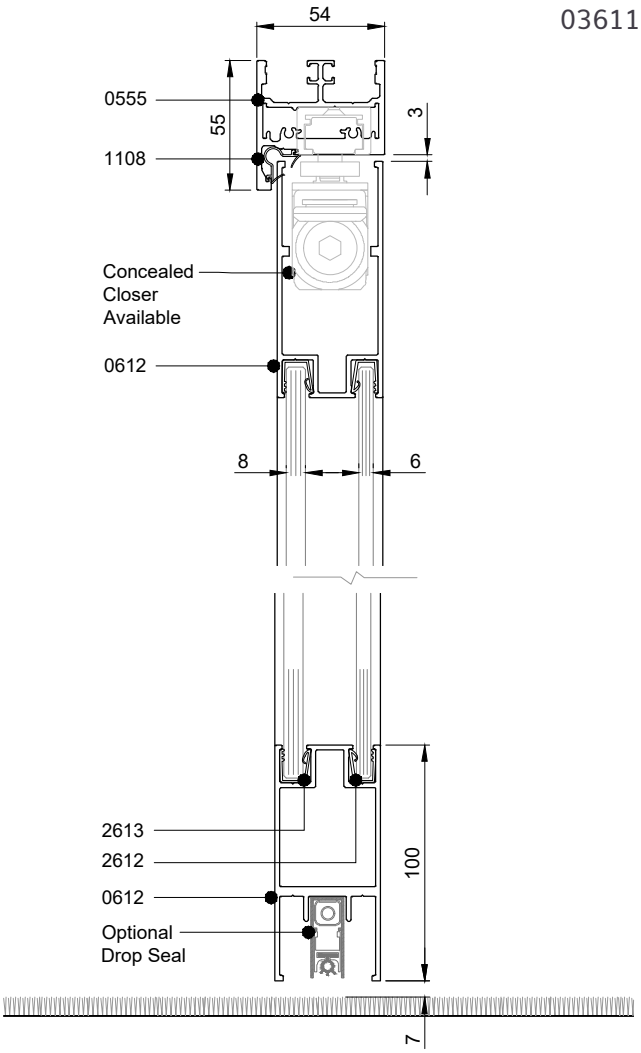

Vertical section showing
Optima 36 double glazed door frame with
non-rebated door, concealed closer

036111a-02

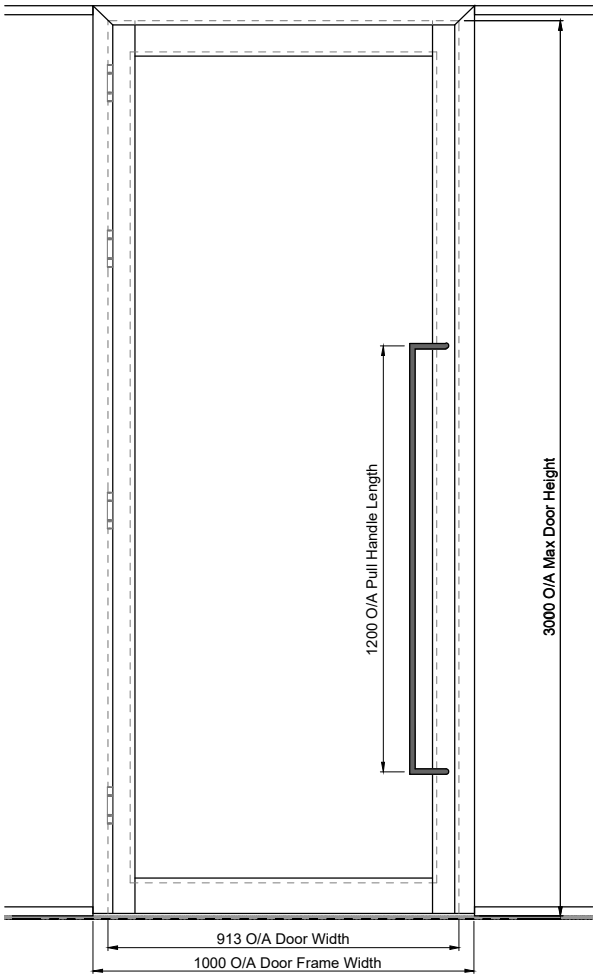

Elevation showing Optima 36
double glazed door frame with
non-rebated door, concealed closer

036111a-03

Optima 36

Sliding Door: Horizontal Section/Elevation

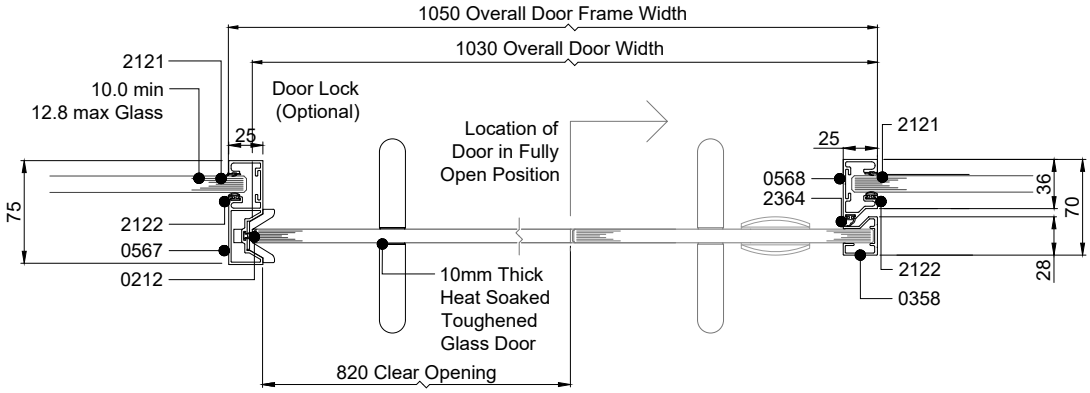

Horizontal section

036112a-01

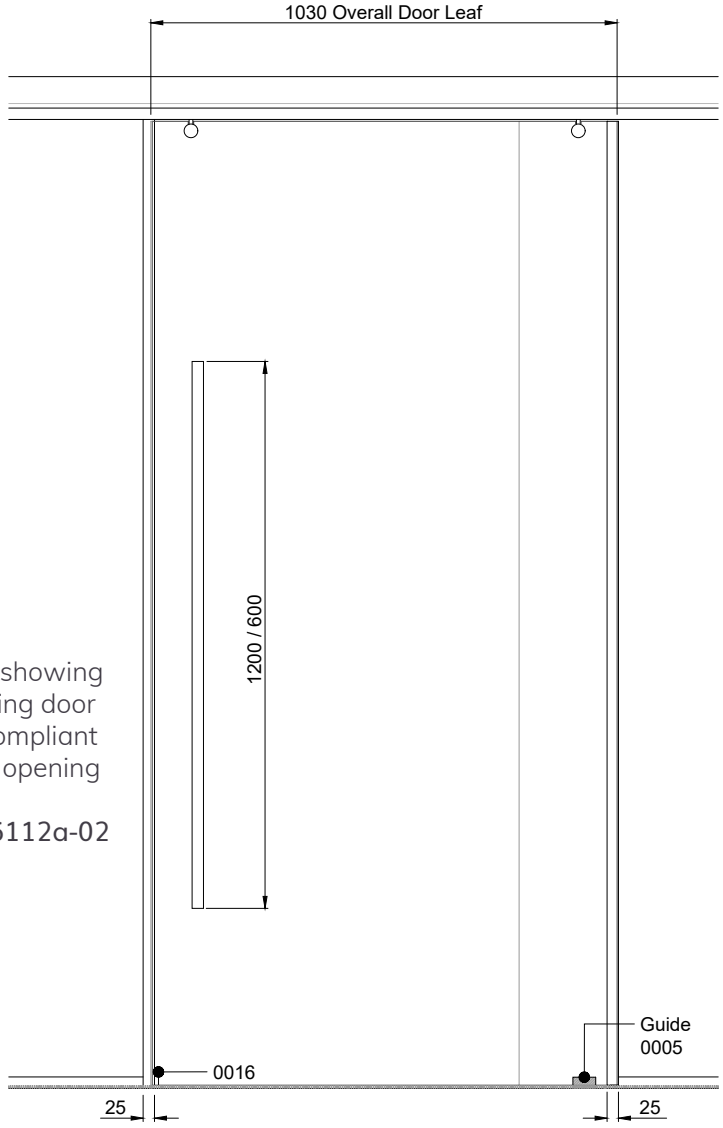

Elevation showing
Optima 36 sliding door
Part M Compliant
clear opening

036112a-02

Optima 36

Sliding Door: Vertical Section Details

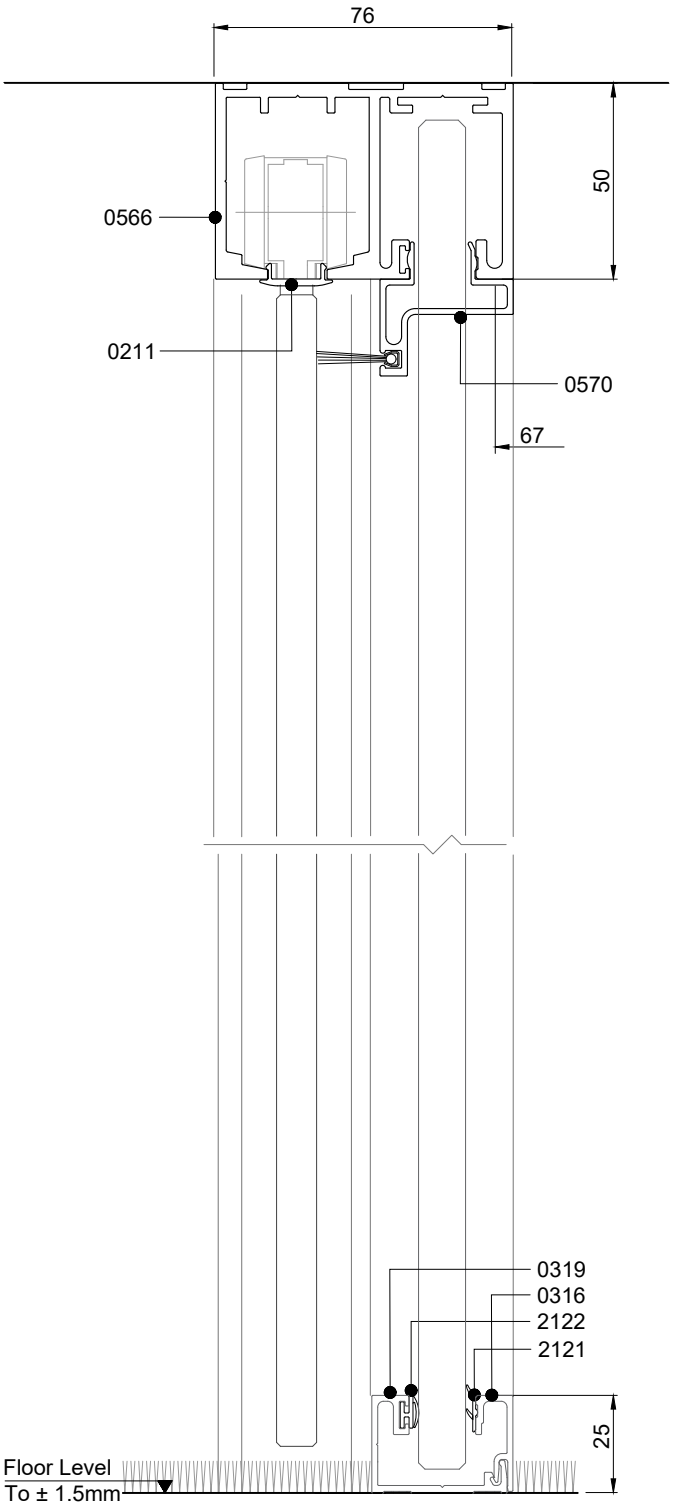

Section through screen of single glazed Optima 36 sliding door

036113a-01

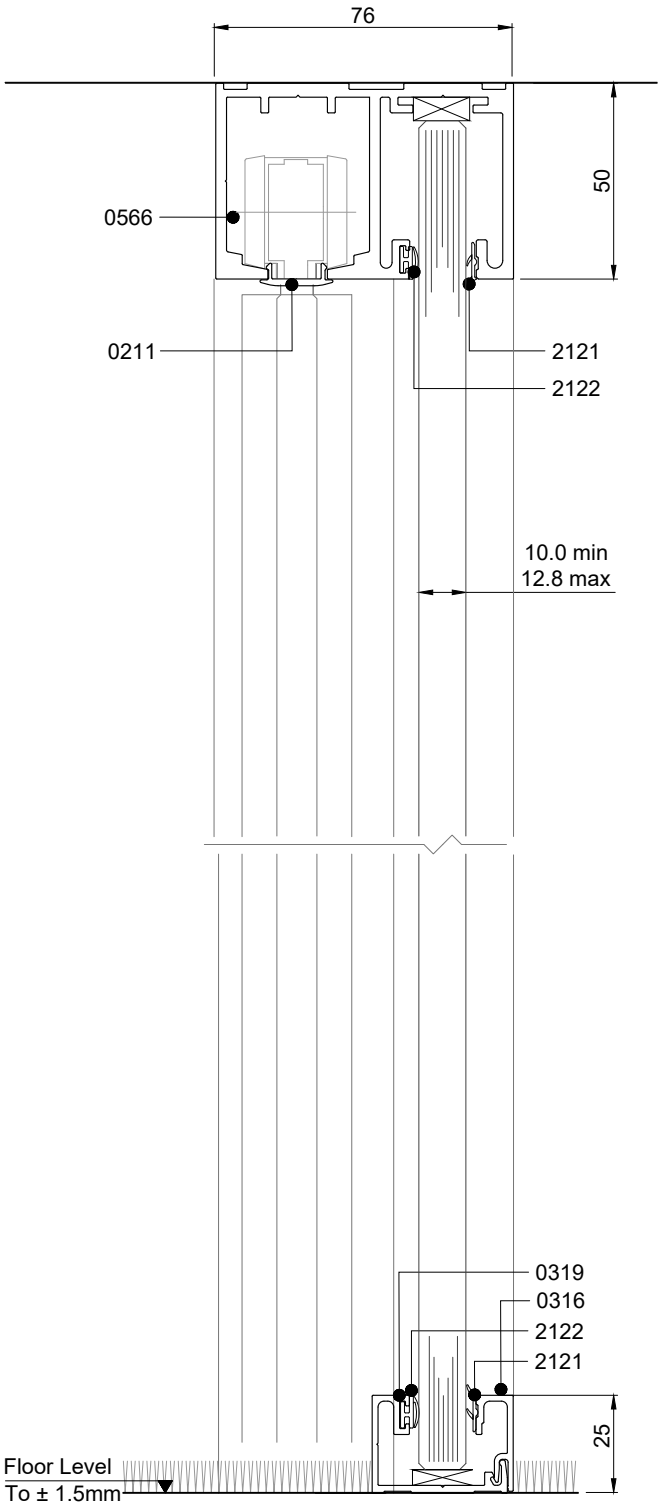

Section through screen of single glazed Optima 36 sliding door

036113a-02

Specification

Live Load Deflection

With the increasing trend towards the use of lightweight building materials, Optima recognises the need to cater for the resulting inevitable live load deflection of both structural slabs and perimeter curtain walling.

The Opti**ma 36** partition system has the capacity to accommodate the following levels of asynchronous live load deflection:

Vertical Deflection: **±25mm** and **±40mm** as standard

Lateral Deflection: **±25mm** as standard

Stiffness

Standards: BS 5234 – Parts 1 & 2
BS 6399 – Part 1

All Optima glazed partition systems are designed to withstand the nominal crowd loadings that may be present in a typical office fit-out where there is no change in level greater than 380mm between one side of the partition and the other.

The recognised standard for the design and installation of partitions is BS 5234. However, since this standard was published, the nature of partition design has evolved to the extent that the standard no longer accurately represents the product on the market.

Part 2 of BS 5234 requires a series of tests to demonstrate strength and robustness with the results defined as a 'Duty Rating'. Unlike the partition types covered in the scope of BS 5234, modern 'frameless' glazed partitions are formed predominantly of glass and the testing regime cannot be reasonably applied.

Instead, Optima uses the known physical and structural characteristics of glass and specifies appropriate partition glass based on calculation and with reference to BS 6399 – Part 1. This standard suggests design loads that may act on the surface of a partition in a range of environments. However, neither BS 6399, nor any other UK standard stipulates the maximum degree of acceptable deflection under the design loads.

Every project is different and Optima considers each on its own merits and calculates the type and thickness of glass accordingly. Without a guiding standard the degree of acceptable deflection is extremely subjective. The Optima recommended criteria for maximum deflection are L/120 or 25mm, whichever is the lesser value. This is in line with the International Building Code, a US standard widely applied in many overseas regions, particularly the Middle East. These criteria will ensure a high degree of stiffness in the partition glass.

A more relaxed set of criteria are commonly applied in the UK. These state that the maximum acceptable deflection should be L/65 or 50mm, whichever is the lesser value. This would result in a more flexible partition. Therefore it is important to ensure that the safe stress limit of the glass is taken into account when specifying type and thickness. This is particularly important when considering glazed partitions for projects and locations where there is less incentive for the occupants to exercise care such as Public Sector buildings, particularly schools and hospitals.

Optima will consider both sets of deflection criteria when recommending glass on a project by project basis and in consultation with designers and specifiers. For further information and advice on glass specification, please contact the Optima Technical Sales Team.

Maximum Height

Taking the above stiffness criteria into account, the Opti**ma 36** system is available as follows:

Maximum Ceiling Height (12/12.8 glass): **3000mm** as standard
Maximum Ceiling Height (10/10.4/10.8mm glass): **3000mm** subject to build configuration
Greater ceiling heights may be accommodated subject to special order and correct glass selection.

Specification

Glass Selection

It is important to select glass appropriate to the situation into which it is being installed. All glass used in Optima glazed systems is class A safety glass as defined in BS6206. However, there are a number of glass types that fall into this category, some more appropriate than others in certain scenarios, and these are explained below.

Annealed Glass

Unprocessed float glass

Annealed glass in its basic, unprocessed form is not categorised as a safety glass and is therefore not suitable for use in partition systems or glass doors.

Toughened Glass

Standard: BS EN 12150

This is annealed glass that has been thermally treated to give it much greater impact resistance: typically seven times greater. Toughened glass satisfies BS6206 in that it breaks safely, shattering into equally sized 'dice'. Toughened glass is the only glass recommended for use where drilling or clamping is required, for example, when used for accommodating door furniture.

It is important to note that the toughening process stimulates Nickel Sulphide (NiS), known as 'inclusions', which occurs naturally in float glass. The presence of these inclusions can, over time, although very rare, induce a spontaneous fracture of a toughened glass panel. While all glass processors take all practicable steps to supply inclusion-free glass, it is not possible to guarantee their absence.

In order to ensure complete customer confidence in the safety of a glass, Optima recommends the use of Heat Soaked Toughened Glass for doors and Laminate Glass for Partitions. See below for more details.

Heat Soaked Toughened Glass

Standard: BS EN 14179

To significantly reduce the risk of NiS induced spontaneous failure, toughened glass panels can be subjected to an additional process known as Heat Soak Testing. Although not providing a 100% guarantee, this process is used to reveal the presence of NiS inclusions. It is a destructive test, designed to break any panel that is at risk.

Laminate Glass

Standard: BS EN ISO 12543

Laminate glass is produced by bonding two layers of annealed glass either side of a PolyVinyl Butyral (PVB) Interlayer. In order to be categorised as a class A safety glass the PVB interlayer must be not less than 0.76mm thick and safe breakage is achieved by the interlayer holding the fractured panel together.

Acoustic Laminate Glass

Standard: BS EN ISO 12543

Acoustic laminate glass is produced in the same way as the regular laminate described above. However, it utilises a specially formulated acoustic PVB interlayer to achieve significantly better acoustic properties.

Toughened Laminate Glass

Standards: BS EN 12150 (Toughened) and BS EN 12543 (Laminate)

This type of glass combines the benefits of both toughened and laminate glass and would typically involve a 1.5mm PVB interlayer. Because it has the additional benefit of lamination, the glass would not normally require the additional process of heat soaking. Toughened laminate glass should typically be specified for glass screens adjacent to a significant change in level (e.g., an atrium) and where there is the potential for significant crowd loading as defined in BS 6180 and BS 6399.

The Optima Technical Sales Team will be happy to assist in the specification of the appropriate glass for your particular project requirements.

Specification

Acoustic Performance

All Optima systems are subjected to sound insulation tests in accordance with BS EN ISO 10140-1:2010 and BS EN ISO 10140-2:2010 at UKAS accredited laboratories. These are optimised tests of the system only and not aggregate values for screen and door. The result is expressed as an Rw value.

The Optima 36 partition system has achieved the following UKAS accredited acoustic values for the stated construct:

32dB (Rw)	Test: L/2984/1 & 2916-2502/3 (2)	10mm Toughened Glass in single glazed multi-module screen
33dB (Rw)	Test: 542-434 & 2916-2502/3 (2)	12mm Toughened Glass in single glazed multi-module screen
35dB (Rw)	Test: 542-435 & 2916-2502/3 (2)	10.8mm Laminate Glass in single glazed multi-module screen
36dB (Rw)	Estimate (1)	12.8mm Laminate Glass in single glazed multi-module screen
37dB (Rw)	Test: 542-436 & 2916-2502/3 (2)	10.8mm Acoustic Laminate Glass in single glazed multi-module screen
37dB (Rw)	WYC407556/P001	2 layers 10mm Toughened Glass in double glazed multi-module screen
38dB (Rw)	Test: 542-432 & 2916-2502/3 (2)	12.8mm Acoustic Laminate Glass in single glazed multi-module screen
38dB (Rw)	WYC407556/P006	2 layers 12mm Toughened Glass in double glazed multi-module screen
39dB (Rw)	WYC407556/P004	10mm Toughened Glass + 12mm Toughened Glass in double glazed multi-module screen
40dB (Rw)	WYC407556/P007	12mm Toughened Glass + 13.14mm Acoustic Laminate in double glazed multi-module screen
43dB (Rw)	WYC407556/P010	2 layers 13.14mm Acoustic Laminate in double glazed multi-module screen
29dB (Rw)	WYC384132/03/P010	Single glazed Door - 10mm Toughened Glass
30dB (Rw)	WYC384132/02/P008	Single glazed Door - 12mm Toughened Glass
34dB (Rw)	22001-R01-B/004	Double glazed Door - 6mm & 8mm Toughened Glass
35dB (Rw)	22001-R01-B/009	Double glazed Door - 6mm Toughened Glass & 8.8mm Acoustic Laminate Glass

(1) Estimate based on UKAS accredited test data and glass manufacturers' published performance data.
(2) Comparison tests to validate Optima 117 Plus acoustic data for Optima 36 system. Performance Certificate available on request.

It should be noted that in an on-site acoustic test, a partition may demonstrate a 3dB to 8dB lesser performance than under laboratory conditions, depending on the partition type. This can be further affected by ambient noise levels on the receiving side of the test sample and by poorly insulated abutments offering a 'flanking' path for audible sound.

For further information on potential aggregate values for screens with doors, or values for alternative glass types, consult the Optima Technical Sales Team.

Specification

CDM Regulations

In the absence of any specific legislation, Optima recommends that designers adopt the following industry-typical design considerations:

Panel Size

- Can the panel be transported to site, loaded out to the workface and installed?
- Is there a suitable access route, particularly if the glass is not located on the ground floor?
- Is it still possible to replace the panel after the building is in service?

Panel Weight

- Can the panel be installed manually? Optima generally consider one man should not be expected to lift more than 25kg for a prolonged duration. However, every lift would have to be properly assessed for risk according to the prevailing circumstances.
  As a guide, the weight of glass should be calculated by 2.5kg x thickness (mm) x area (sq.m).
- If mechanical means to install would be necessary, can this be achieved if the panel needs to be replaced during the lifespan of the building?

Breakage

- What would be the consequence of a panel failure?
- Is the panel in a safety critical location? (e.g. an atrium barrier)
- Should a fail safe condition be built into the design?
- Is there risk to building occupants as a result of the breakage?
- Can the panel be replaced safely?

Maintenance

- Can the installation be maintained safely and without undue risk?
- Is there a mechanism to protect the maintenance staff, such as safety harness anchorage points?

Every project will throw up its own unique challenges. The Optima Technical Sales Team should be consulted at the earliest opportunity, if there is any doubt that a scheme can be built and maintained safely.

Specification

Building Regulations Approved Document K (2013)

Glass Entrance Doors and Glazed Screens

- The location of glass entrance doors should be easily distinguished, especially when they are within a glazed screen and when the door is both open and shut.
- Manifestation should be clearly contrasting with the background in all weather/lighting conditions.
- Manifestation should be located between 850mm–1000mm and 1400mm–1600mm i.e. in 150mm high bands which could be a solid band, a decorative feature or split bands of 50mm each.
- High contrast strips at the top and on both sides of a glazed door in a glazed screen should be provided.
- If glass doors can remain in the open position, the leading edge should be clearly distinguished and protected by guarding (entrance doors only) to prevent it becoming a collision hazard.

Please refer to Door Sets Designer's Guide for information regarding minimum clear openings in relation to Part M.

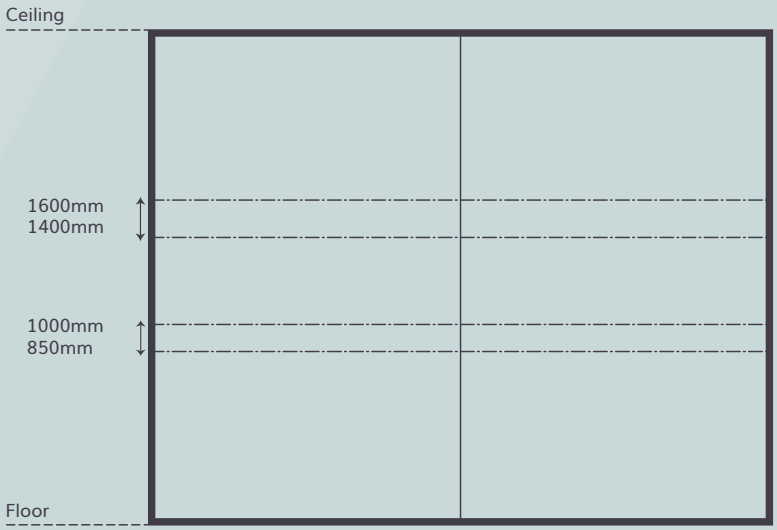

Optima

No. 6 Jalan Utarid U5/13
Mah Sing Integrated Industrial Park
Seksyen U5
40150
Shah Alam
Selangor
Malaysia

www.optimasystems.asia